Problem Set 2

Due Date: Fri Feb 13, 2026 by 11.59 PM

Name:_____

Collaborators:_____

For Grading Purposes Only:

Q1: ____ / 14
Q2: ____ / 22
Q3: ____ / 10
Q4: ____ / 12
Q5: ____ / 8
Q6: ____ / 8
Q7: ____ / 11
Q8:_____/ 9
[B1:____ / 4]

Total:____ / 94

Instructions:

Show all your work. If we can't figure out how you reached the answer, you won't get credit. More importantly, if you show your work but messed up the figures, you can get partial credit for your thought process.

MENTION ALL YOUR COLLABORATORS and which problems you collaborated on. There is no negative marking for collaborating on problems.

Problem 1: More Circuits (14 points)

a. For the circuits shown below, find I_R as a function of other circuit elements. Also, find the power *generated* by each source, in each circuit. (6 points)

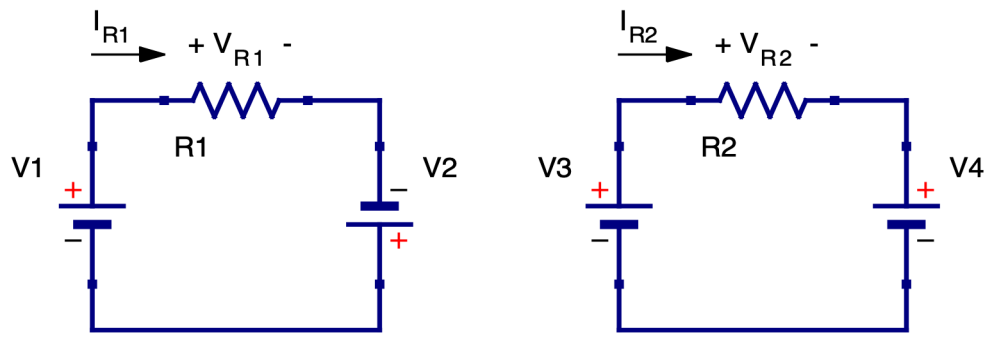

b. Assuming that $V_1 = 1V$, $V_2 = 2V$, $V_3 = 3V$, $V_4 = 4V$, and $R_1 = R_2 = 1\Omega$, please comment which sources generate and which dissipate power. (4 points)

c. Find voltages V_{AB} and V_{CD} in circuits below where $V_A = 5V$, $I_s = 2A$, $R_1 = R_3 = 40\Omega$, $R_2 = R_4 = 20\Omega$. (4 points)

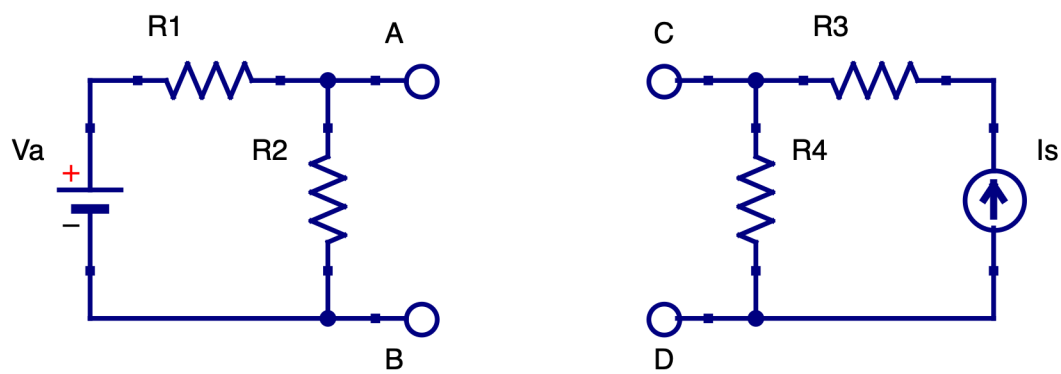

Problem 2: Circuit Comprehension (22 points)

For the following questions, you may use calculations to illustrate your choices and circuits OR explain your logic in detail, using ideas about current/voltages/resistances in a circuit.

Leaving ES 50 class one day, you notice a little medallion lying on the floor with the words, "Resistance is futile!" As you pick up the medallion, your hand accidently rubs it and lo and behold! 5 genii appear in front of you and announce that they had been imprisoned by an evil ES professor for sleeping during class. They are so thankful to you, they become your slaves.

"Great!" you think, "No more psets!"

"Er..." says the first genie: "there's a small problem. The professor linked our powers forever to these light bulbs".

Each genie quickly produces a light bulb and one also supplies a $30V$ battery. "The brighter the light bulb," explains the first genie, "the more powerful we are".

"Oh", you say, desperately trying to remember your ES 50 lecture, "Er...how much resistance does each bulb have?"

The genii look blankly at each other. They have no clue (living in a medallion is not an exciting intellectual environment). "20Ω?" guesses one.

a. You connect the $30V$ battery to a circuit. Assuming that the genie's guess is correct, draw the circuit that will give each bulb its maximum brightness. Label the components with the correct voltage and resistance values. How much power will each bulb get? (4 points)

"You donkey!" says another genie to the first. "Don't you remember that the professor gave each of us different light bulbs? Those of us who begged for mercy the most got the lowest resistance, and those who showed the greatest defiance got bulbs with the highest resistance".

Further investigation on your part reveals that the resistances are 3Ω, 6Ω, 12Ω, 15Ω, & 18Ω for the different light bulbs.

b. Thoroughly annoyed that the genie waited for you to finish the circuit before sharing this piece of information, you disconnect the entire circuit and then proceed to build the new circuit. What configuration of the bulbs will you use to give each bulb its maximum brightness? Now how much power will each bulb get? (4 points)

Now that the genii are fully awake and working at maximum power, life has become much easier. However, you quickly discover that the most powerful genii aren't doing any work at all, but staying nice and warm, drinking hot coffee and bullying the less power genies into doing your work.

c. Thoroughly displeased at this state of affairs, you decide to reduce the power of the two most powerful genii from part b. How will you reconnect the circuit without affecting the other three genii? Which is the most powerful genie now? (Answer should be of the form, 'the genie with the light bulb with R =?') (4 points)

In order to distribute the load more fairly, you divide up the genies into three groups: 2 groups of 2 genii and a single genie. No group should be more powerful than the other.

d. Which genii will you pair with each other, and how will you connect the circuit? Draw the new circuit. (4 points)

The ungrateful genii soon grow tired of you getting them to do your ES 50 homework for you, bringing you pizza and tampering with fire alarms so you can illegally smoke in your room. Reneging on the deal, they grab you one night and drop you in the middle of the Gobi Desert. However, the least powerful genie (who is that?) is still loyal to you and secretly leaves you the bulbs, batteries and rest of the circuit.

e. How will you connect the bulbs now so that your friend is the most powerful? Draw this circuit. (4 points)

Unfortunately, your little pal is letting things go to his head and thinks he's too grand to do work. By now, you've realized that things aren't exactly working out as they did in Aladdin and you're completely fed up. You decide to put an end to the genies once and for all. You grab the circuit and...

f. Complete the sentence. (2 points)

Problem 3: Equivalent Resistance (10 points)

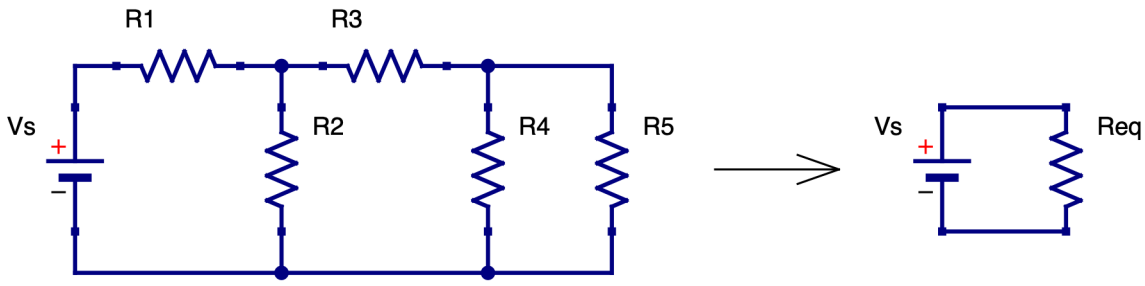

Figure A Figure B

a. For the circuit shown in *Figure A*, find the expression for the equivalent resistance R_{eq} seen by the voltage source V_s so that the circuit can be simplified as shown in *Figure B*. (6 points)

b. Using the information from part a, find the power generated by the voltage source V_s. You can assume that $R_1 = R_2 = R_3 = R_4 = R_5 = 10\Omega$ and $V_s = 32V$. (2 points)

c. What is the total power dissipated by ALL resistors together? (Hint: this can be done without finding all currents and voltages for all resistors) (2 points)

Problem 4: KVL, KCL, and Ohm's Law (12 points)

For the circuit below:

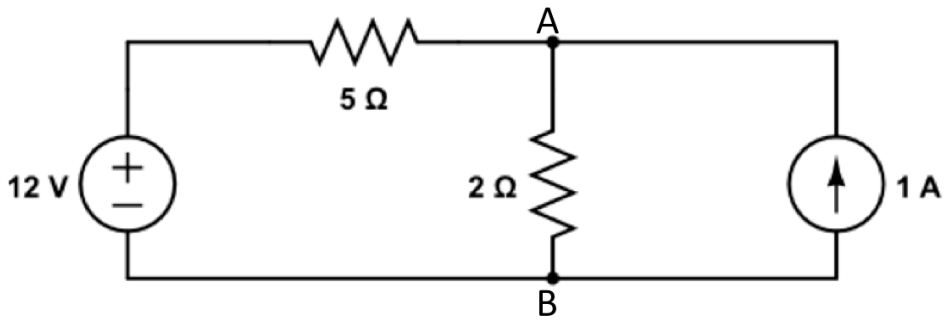

a. Label all the currents and voltages across the resistors, consistent with references used in Ohm's Law. (2 points)

b. Solve for all the values of resistor currents. (2 points)

c. Also solve for the values of the current going through the voltage source and the value of voltage across the current source. Indicate the direction of the voltage across the current source (which side is +, which side is −). (2 points)

d. What is the power generated by each source? (2 points)

e. Now, use the method of Nodal Voltages to solve the same circuit. You can start by grounding the node B, and finding the potential V_A. Once you do that, find the currents flowing through each resistor, current flowing through the voltage source, and voltage across the current source. Please use the same reference directions as those you chose in part (a). Which method is faster: combination of KCL and KVL or Nodal Voltages? (4 points)

Problem 5: KVL, KCL, and Ohm's Law (8 points)

For the circuit below:

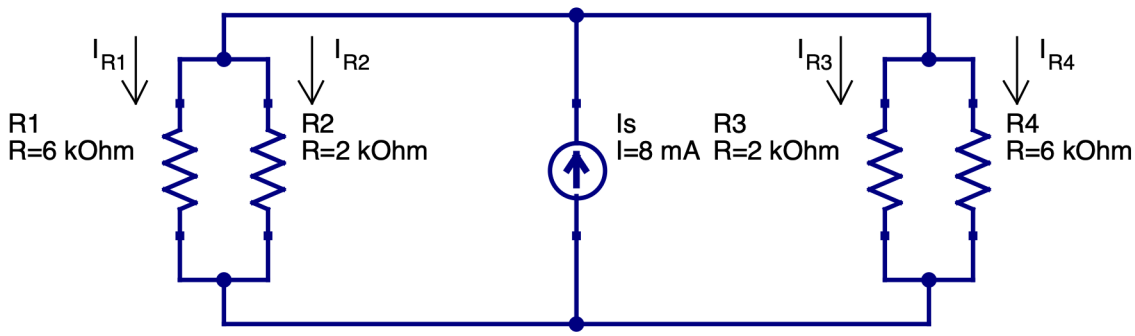

a. Solve for the values of I_1, I_2, I_3, and I_4 in the circuit above. (4 points)

b. What is the voltage across the current source (direction and magnitude)? (2 points)

c. You can simplify the circuit above and represent it by a current source and a single *equivalent resistor*, R_{eq}. What is the value of R_{eq}? What is the value of the power generated by the current source? (2 points)

Problem 6: Nodal Analysis of Circuits (8 points)

a. For the circuit shown below, solve for I_1, I_2, I_3, and V_x. Here the ground is shown (triangular symbol). In the other parts of the problem, you should indicate where the ground is (on the circuit). Also note that we have indicated directions for the currents, to help you start solving the problem. (4 points)

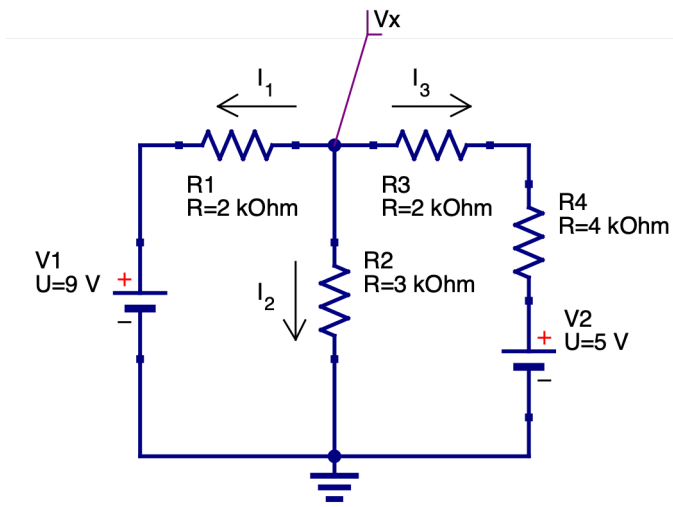

b. For the circuit shown below, find I_1, I_2, and V_{R_3}. Chose the location of ground and add it to the circuit before solving. (4 points)

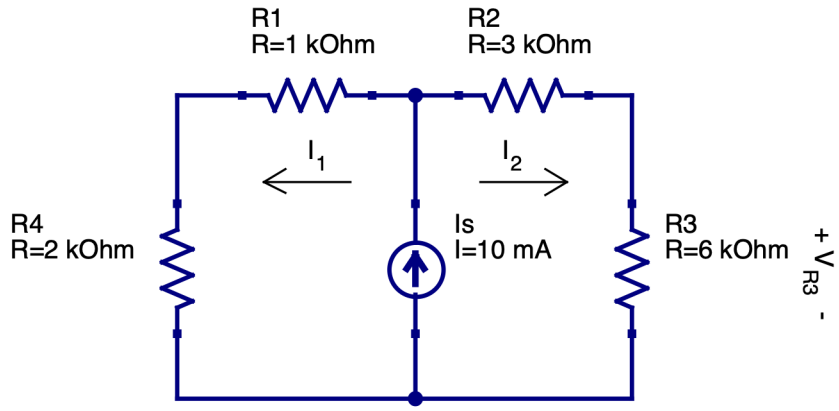

Problem 7: Superposition (11 points)

Superposition is an important method to simplify circuit and make easier to solve for voltages and currents. Note: The device "below" V_a, measuring I_a, is an ammeter.

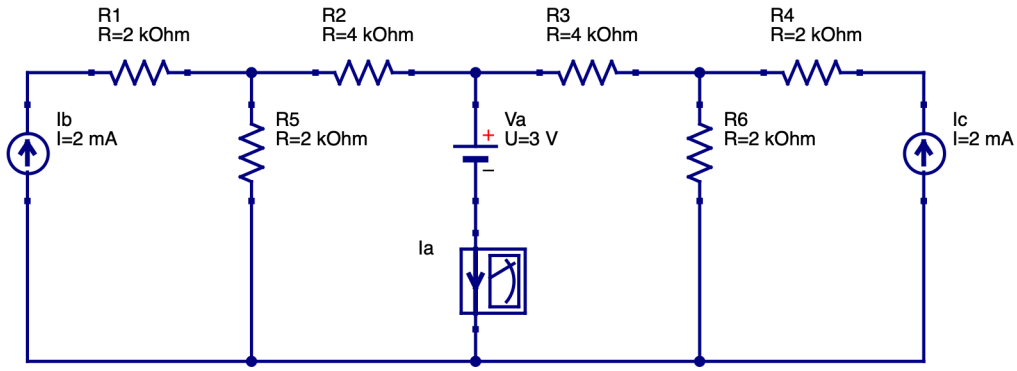

a. Redraw the circuit above and solve for the current flowing through V_a solely due to the voltage source, V_a. (3 points)

b. Redraw the circuit above and solve for the current flowing through V_a solely due to the current source I_b. (3 points)

c. Redraw the circuit above and solve for the current flowing through V_a solely due to the current source I_c. (3 points)

d. What is the total current flowing through V_a? (2 points)

Problem 8: Circuit Debugging (9 points)

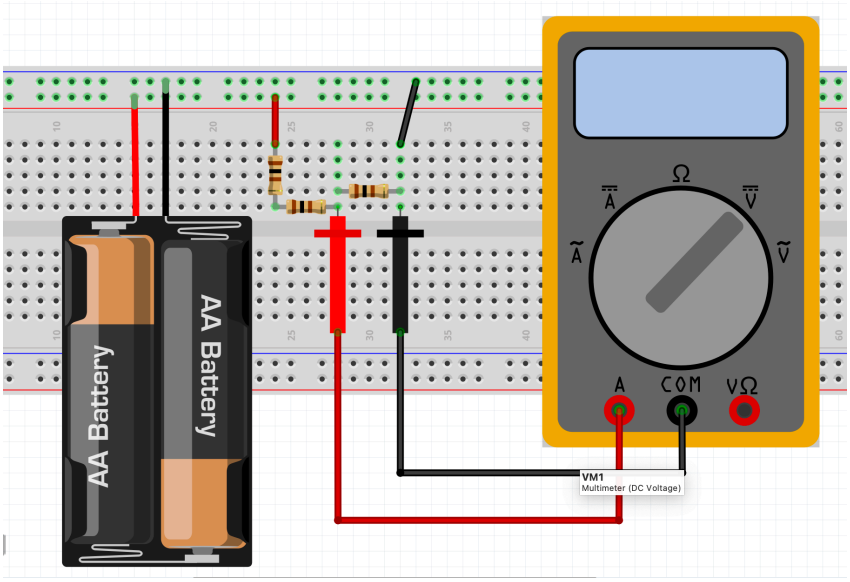

a. For the breadboard shown above, draw the circuit schematic depicted on the breadboard. Include the values for each element and don't forget multimeter. (6 points)

b. Are there any errors in the way this circuit is wired or probed? If so, elaborate. (2 points)

c. Using your answer for part b, determine what circuit was intended, fix the errors, and draw that circuit. Now calculate V_3 that voltmeter should measure. (1 points)

Bonus Problem B1: Equivalent Resistance (4 points)

We have an infinite network of resistors, with each resistor = 1Ω (shown below).

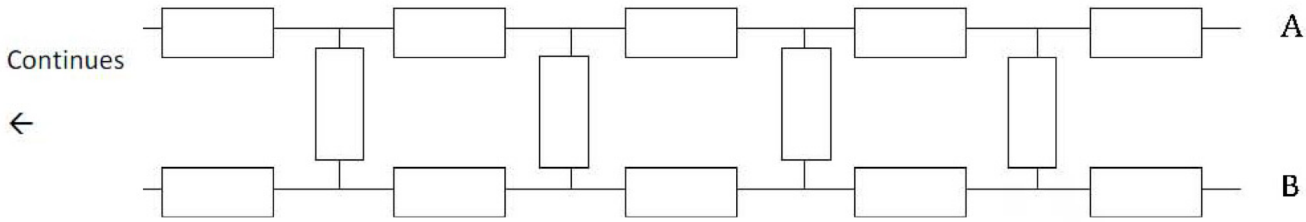

Find the resistance between A and B. In other words, what resistance would you measure if you attach a digital multimeter between points A and B?